1. OUTLINE DRAWING: (UNIT: mm)

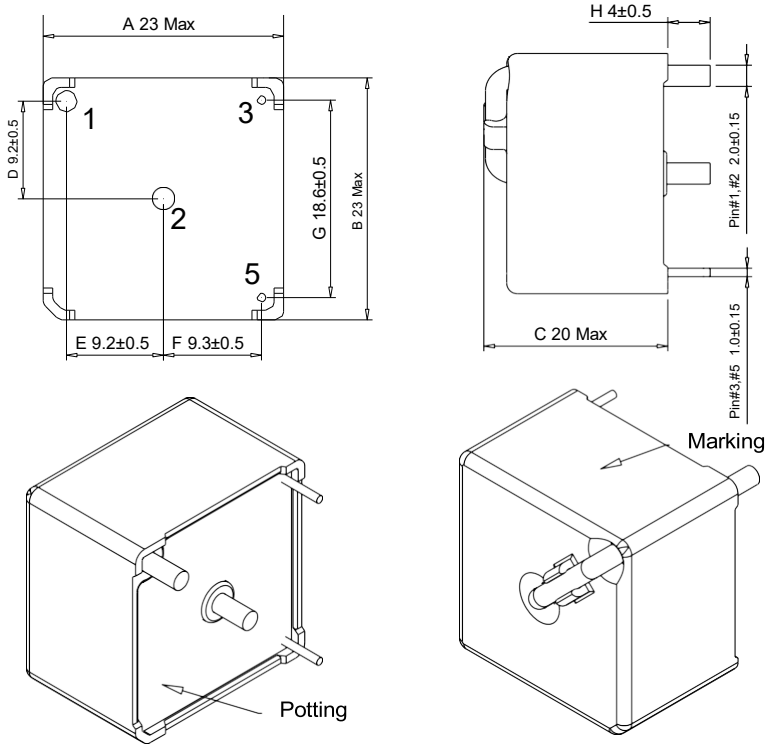

Notes:

- PCB opening aperture is recommended to be 2.6mm and 1.4mm.
  Because of the coplanarity of the primary U-shaped guide pin, we strongly recommend that the opening aperture of the primary U-shaped PCB should be 2.6mm to avoid the difficulty of assembly due to interference when inserting subsequent products into the PCB.
- If PIN layout and footprint have slightly deviation, please refer to actual PCB assembly, the ones can be normally inserted into PCB is qualified.
- The Pin length doesn't include the solder tip.

2. LABEL:

XZM-CT50A01-SF YYWW

YY:Year
WW:Week

3. SCHEMATIC:

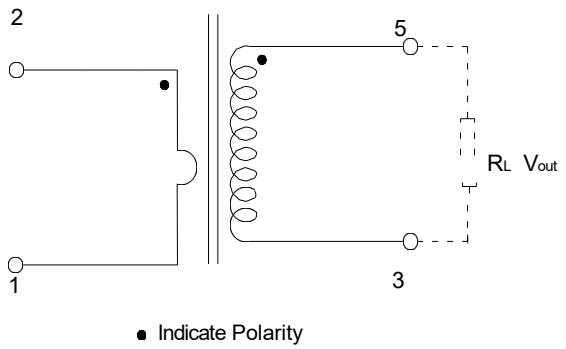

Remark:
The dotted line does not exist, just to illustrate the principle and test requirements.

4. ELECTRICAL SPECIFICATION:

TEST TEMPERATURE @25±2℃:

Item	Terminal		Load=50Ω			
Precision class: 0.2	5--3	Input rated current %, 2—1, 50Hz,	5%	20%	100%	120%
		Input rated current (A), 2—1, 50Hz	2.5A	10A	50A	60A
		Amplitude error (%)	±0.75%	±0.35%	±0.20%	±0.20%
		Phase angle error (')	30' Max	15' Max	10' Max	10' Max

Item	Terminal	Specification	Test condition
DCR (Ω)	5---3	60Ω Max	Ta=25°C
Dielectric strength	2----5	4.0kVac	1mA/50Hz/2s

5. NOTES FOR USE:

1) Insulation Class: Class B
2) RoHS compliant directive 2011/65/EU(RoHS 2011/65/EU)
3) Operating Temperature range: -40℃ to +85℃(Temperature rise included)
4) Storage temperature range: -40° to +85°C
5) Resistance to solder heat: +260±5℃, 3-8Sec
6) Rated working Frequency: 50~100Hz(sinusoidal)
7) Rated current: 50Arms
8) Load resistance: ≤50Ω
9) Turns Ratio: 1:1000